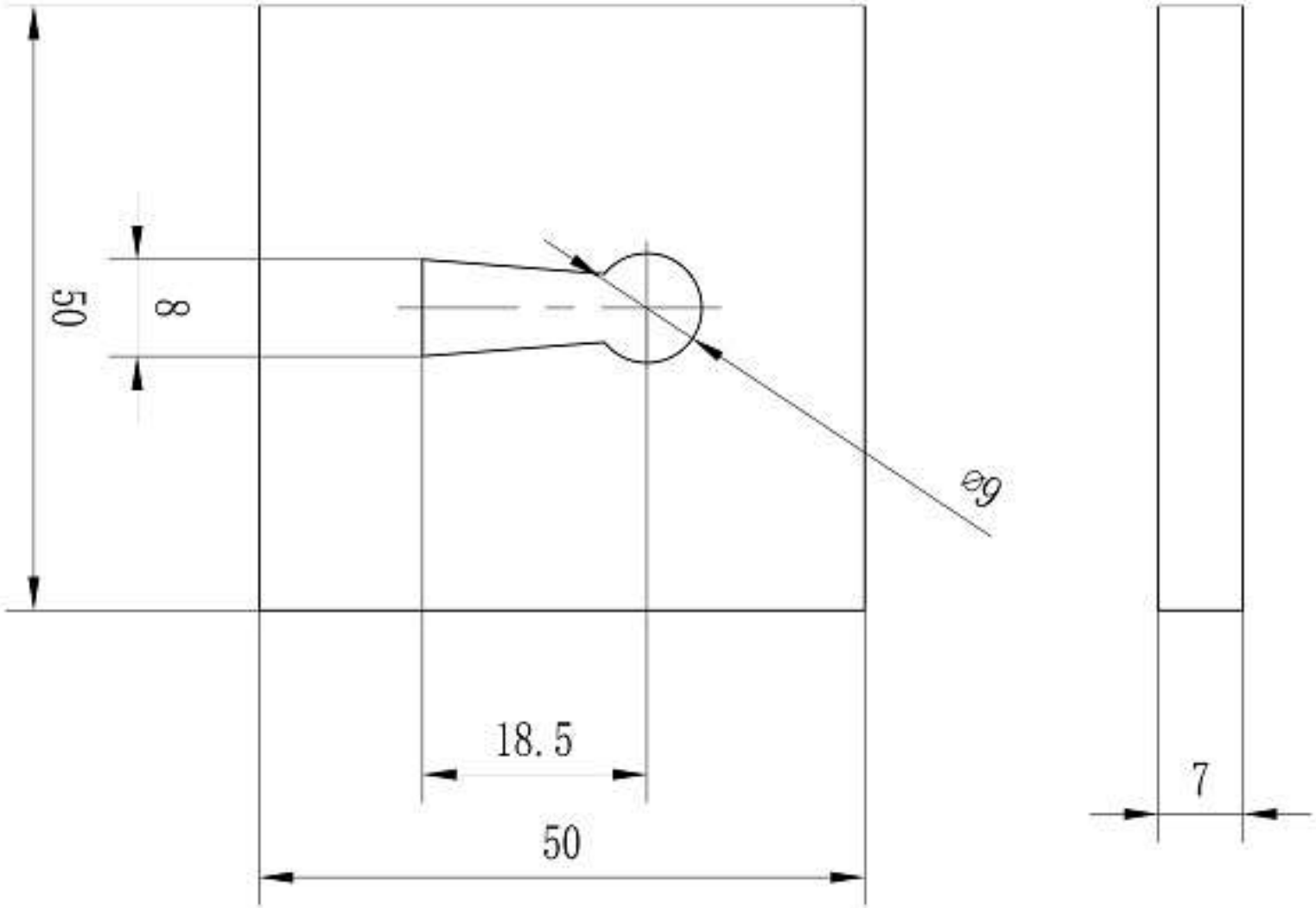
50
8
⌀9
18.5
50
7